YINGJIAO®

YSDT480 SERIES 480W



YSDT series are designed with metal housing and for there phase system with wide range from 340V AC to 550V AC.

The series ofer built-in constant current limiting circuit and active PFC function, and operating in wide temperature range.

They are suitable for industrial-related applications such as industrial control, semiconductor fabrication equipment, and factory automation etc.

Features

- 3-phase 340~550VAcwide Range lnput (2-phase operation possible)
- Built-inActive pFc Function
- protection:short circuit/overload /over Voltage/over Temperature
- DC OK Relay contact
- Bulit-in constant current Limiting circuit
- High Efficiency 92% and Low power Dissipation
- Full power Between -30~+60 ℃
- Three years warranty

Model Information

yingjiao Part number	DC VOLTAGE	RATED CURRENT	RATED POWER	VOLTAGE ADJ. RANGE
YSDT480-24	24V	20A	480W	24 ~ 28V
YSDT480-48	48V	10A	480W	48 ~ 55V

Input

RATED INPUT	Three-Phase 380~ 480VAC (Dual phase operation possible) 480 ~ 780VDC
INPUTVOLTAGE RANGE	340 ~ 550VAC/450 ~ 850VDC
FREQUENCY RANGE	47~63Hz
POWER FACTOR (TYP.)	PF≥0.9/400VAC at full load PF≥0.88/500VAC at full load
EFFICIENCY (TYP.)	92.5% YSDT480-24 93.0% YSDT480-48
AC CURRENT (TYP.)	0.85A/400VAC
	0.7A/500VAC
INRUSH CURRENT (TYP.)	COLD START 50A
LEAKAGE CURRENT	<3.5mA / 530VAC

Output

RIPPLE & NOISE (max.)	150mVp-p
VOLTAGETOLERANCE	±1.0%
LINE REGULATION	±0.5%
LOAD REGULATION	±1.0%
SETUP, RISETIME	1200ms, 60ms/400VAC at full load 800ms, 60ms/500VAC at full load
HOLD UPTIME (TYP.)	20ms / 400VAC at full load 20ms / 500VAC at full load

Protection

OVER LOAD	105 ~ 130% rated output power. Protection tYpe: Constant current limiting, unit will hiccup after 3 sec., re-power on to recover.
OVERVOLTAGE	29~33V YSDT480-24 56~65V YSDT480-48 Protection tYpe: Shutdown o/p voltage, re-power on to recover.
OVERTEMPERATURE	Shutdown o/p voltage, recovers automaticallY after temperature goes down.

Environment

WORKINGTEMP.	-30 ~ +70 ℃ (Refer to "Derating Curve")
WORKING HUMIDITY	20 ~ 95% RH non-condensing
STORAGETEMP., HUMIDITY	-40 ~ +85 ℃, 10 ~ 95% RH non-condensing
COLD START	-40 ℃
TEMP. COEFFICIENT	±0.03%/ ℃ (0 ~ 50 ℃)
VIBRATION	Component:10 ~ 500Hz, 2G 10min./1cYcle, 60min. each alongX, Y, Z axes; Mounting: Compliance to lEC60068-2-6
MTBF	1000K hrs min.TelcordiaSR-332(Bellcore)

SAFETY & EMC

SAFETY STANDARDS	UL61010-1, UL61010-2-201, BS EN/EN61010-1
WITHSTANDVOLTAGE	l/P-O/P:3KVAC l/P-FG:2KVAC O/P-FG:0.5KVAC O/P-DC OK:0.5KVAC
ISOLATION RESISTANCE	l/P-O/P, l/P-FG, O/P-FG:>100M Ohms / 500VDC / 25 / 70% RH
EMC EMISSION	BS EN/EN55032(ClSPR32)
EMC IMMUNITY	BS EN/EN61000-4-2, 3, 4, 5, 6, 8

Note

1.All parameters NOT specially mentioned at 400VAC input, ratedIoad and 25℃ of ambient temperature.

2.Ripple&noise are measured at 20MHz of bandwidth bY using a 12, twisted pair-wire terminated with a 0.1uF & 47uF parallel capacitor.

3.Installation clearances: top with 40mm, bottom with 20mm, left and right with 5mm. Increase the space to 10-15mm when the adjacent device is heat source.

4.The ambient temperature derating of 3.5 ℃/1000m for operating aItitude higher than 2000m(6500ft).

5.The power supply is considered a component which wiII be instaIIed into a final equipment. The final equipment must be re-confirmed that it stiII meets EMc directives. For guidance on how to perform these EMc tests, please refer to"EMl testing of component power supplies."

Dimensions & Weight

Length:	85.5mm / 3.37in
Width:	129mm / 5.08in
Height:	125mm / 4.92in
Weight:	1.51kg

Packing

Carton size:	49 X 34.5 X 16.5 cM 19.3 X 13.6 X 6.5 in
Master carton Quantities:	8pcs / carton

Mechanical Specification

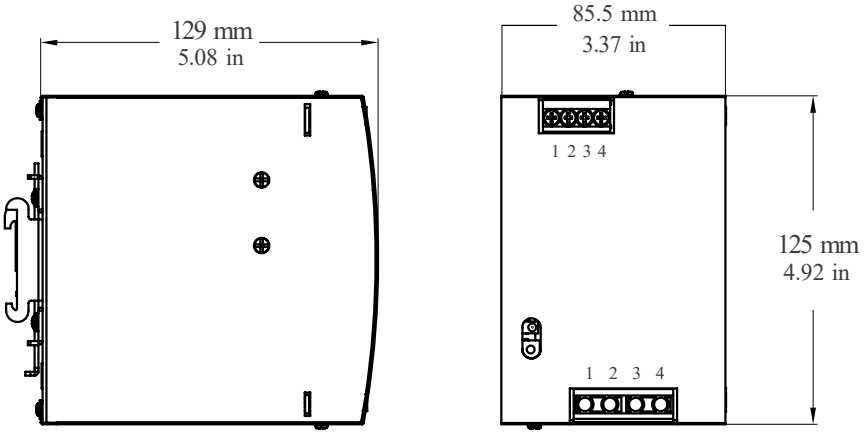

Input

No.	Description
1	PE ⏚
2	AC/L3
3	AC/L2
4	AC/L1

Output

No.	Description
1,2	DC OUTPUT +V
3,4	DC OUTPUT-V

Block Diagram

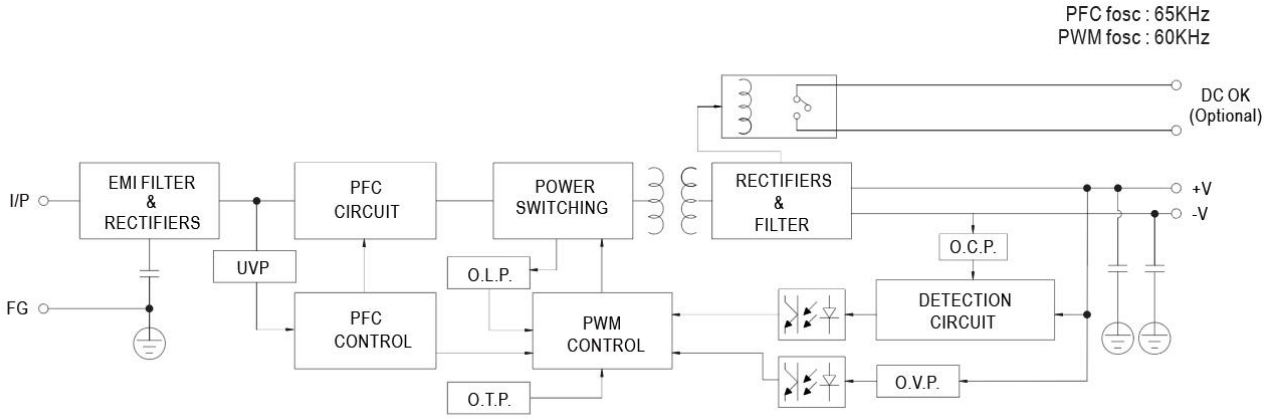

Deduction curve and Temperature

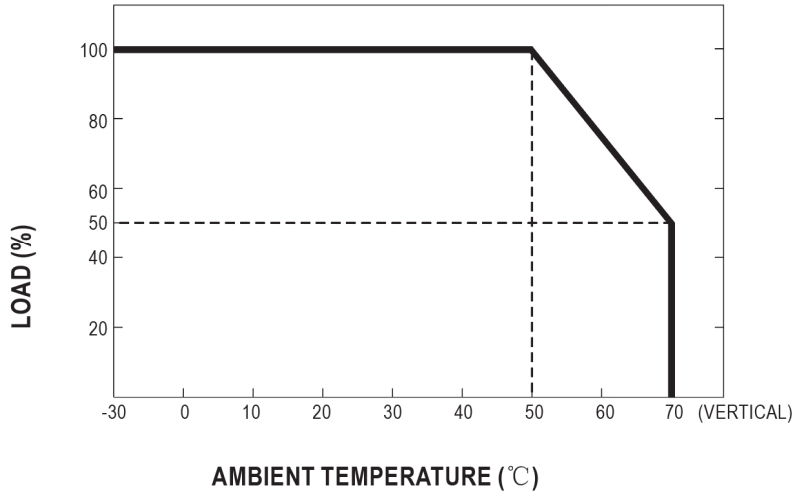

Minus output and Input voltage curves

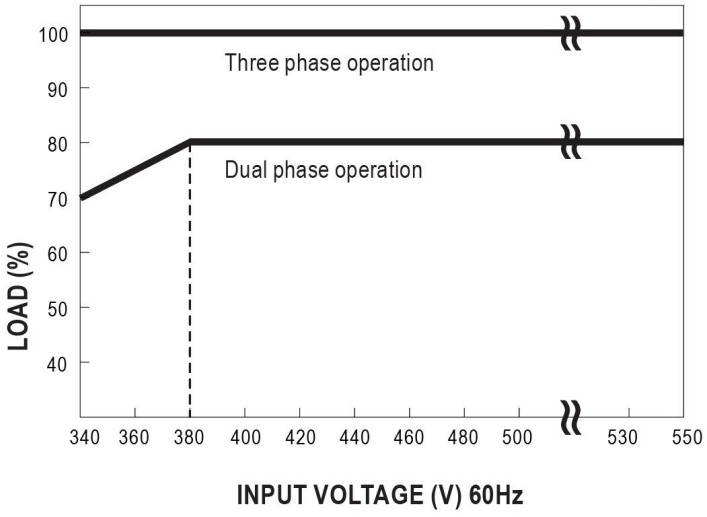

DC OK Relay Contact

Contact Close	PSU turns on/DC OK
Contact Ope	PSU turns off/DC Fail
Contact Rating(max.)	60VDC/0.3A, 30VDC/1A, 30VAC/0.5A resistive load.

Control Pin(Option): XH-2WAP ~ 20WAP-02P or equivalent			
Pin No.	Assignment	Mating Housing	Wire Diameter
1,2	DC OK Relay Contact	XH-2WAP ~ 20WAP-02P or equivalent (Including in the single package)	0.128~0.404mm² （26~24AWG)

